OPERATION MANUAL

FUTURECALL

Telephone Model: FC-1507

I. FEATURES

- 3 Direct Memories (M1, M2 and 911 key)
- 10 Indirect Memories
- Flash
- Redial/Pause
- Mute
- Ringer Hi/Lo switch
- Ringer Light
- Receiver Hi/Lo Switch
- Extra loud Ringer feature
- Memories Backed Up
- No Batteries Needed

II. FEATURES WITH DIAGRAM

1. Direct Memories Key
2. 911 memory Key
3. MEM Key
4. Redial/Pause key
5. Flash key
6. Dialing key
7. Mute key
8. Store Key
9. Ringer Hi/Lo Switch
10. Line Jack
11. Receiver Hi/Lo switch
12. Ringer Light

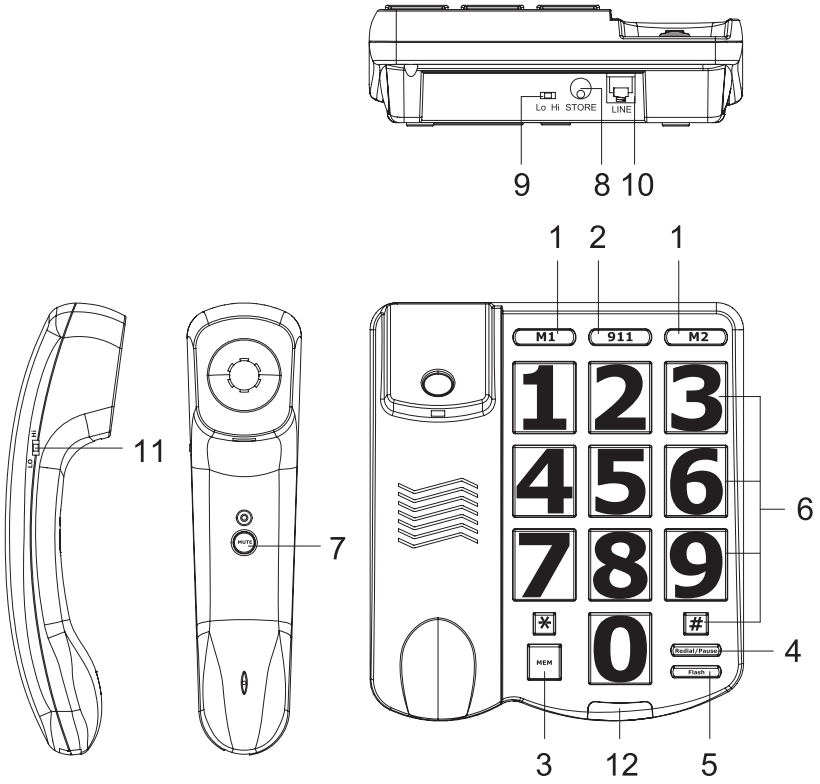

III. INSTALLATION:

Connect one end of the line cord to the telephone line wall socket and the other end to the backside of the telephone.

IV.OPERATION

1. Receiving a Call

Whenever the phone rings, pick handset to answer a call.

2. Making a phone Call

Pickup the handset and listen for a dial tone. Then dial your call in one of the three ways:

- press the keys for the numbers you wish to call, or
- press REDIAL key (4) to call previously dialed number, or
- press Direct memory key (M1, 911, M2) or MEM key (3) & followed by any of the ten numeric keys (0,1,2,..9) designating the memory location containing the number you wish to dial.

3. Ending a Call

When you finish your conversation, return the handset to the cradle.

4. Storing a number in Memory

a) Lift handset

b) Press STORE key(8)

c) Entering the desired phone number

d) Press STORE key again

e) Enter direct memories button (M1, M2) or Enter a numerical key (0,1,2,.. 9) for 10 indirect memories

f) Put back the handset onto the cradle unit

Note : The phone number is then stored in the memory location designed by the last digits pressed (location 0 to 9)

5. Disconnecting 911 Key

As the 911 key is preprogramed from the factory if you need to disconnect the 911 key you may program any other number you wish or just the digit “1” into this key by the following.....

a) Lift handset

b) Press STORE key (8)

c) Entering “1” or any number you wish to store

d) Press STORE key again

e) Press 911 key

f) Put back the handset onto the cradle unit

6. Mute Operation

During your phone call, if your want a private conversation not to be heard by the other party on the line.

a) Press MUTE key(7).

b) To continue your phone call, release the mute key.

7. Redial Function

When the handset is lifted from the cradle and the REDIAL(4) key is pressed, the last number entered will automatically redial again.

8. Pause function

Press this key(4) for insert a 3.6s pause during storing memory or dialing number..

9. Flash Function.

Press the Flash key(5) the phone line will break and disconnected. It is for Call-waiting or other functions offered by local telephone company.

10. Setting Ringer Volume

Set Ringer Switch(9) to HI (High) or LO (Low) position to adjust the volume of the ringer.

11. Set Receiver volume

Slide the receiver volume switch to Hi or Lo for the volume adapt to you.

SERVICE

According to FCC regulation. This equipment which has been certified and registered by the FCC, may only be repaired by authorized person, the FCC certification may be voided. Should you encounter any problems, please call the FUTURE CALL LLC.

Toll-free Customer Hotline for assistance:

1-888-934-CALL (2255) Monday - Friday between the hours of 9:00 am - 6:00 pm PST

For general inquires, you can e-mail to helpl@future-call.com or visit our website at **www.future-call.com**

FOR WARRANTY AND OUT-OF WARRANTY SERVICE:

You may call our toll-free hot line on 1-888-934-CALL (2255) 9 AM-6 PM PST or E-mail to help@future-call.com

QUESTIONS?

STOP...doesn't take unit back to the store.

LOOK...for the toll-free "help" telephone number.

LISTEN... as our experts talk you through the problem.

LIMITED WARRANTY AND SERVICE

FUTURE CALL LLC. Warrants this product to be free from defective materials or factory workmanship and will replace or repair this unit or any part thereof, except batteries, if it proves to be defective in normal use or service within 90 days from date of original purchase. Our obligation under this warranty is the repair or replacement of the defective instrument or any part thereof, except batteries. This warranty will be considered void if unit is tampered with, improperly serviced, or subjected to misuse, negligence or accidental damage. There are no other

express warranties other than those stated herein.

This warranty gives you specific legal rights, and you may also have other rights which varies from state to state. TO OBTAIN SERVICE PLEASE E-MAIL US ON help@future-call.com OR CALL US TOLL FREE 1-888-934-CALL (2255) 9 AM-6 PM PST (IF THE UNIT IS UNDER WARRANTY PROOF OF PURCHASE MUST BE PROVEN